Great MathWorksheets

Grade 4 – Lesson 21

Math Practice Sheets

Measurement Part I

Examples

Practice Questions

Extra Challenge Unit

Student Name

_____

Unit 21.1 Area Concept

Example

Phoenix drew a shape in the class. What is the area of this shape?

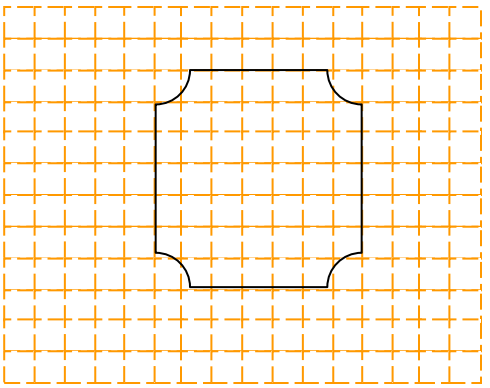

There are about 45 square inside the shape. So, area of this shape = 45 square units.

The amount of space inside the boundary of the object is called its <u>area</u>.

Exercise

1. Count the following squares and find the area.

a)

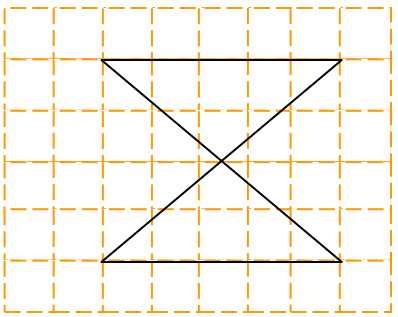

b)

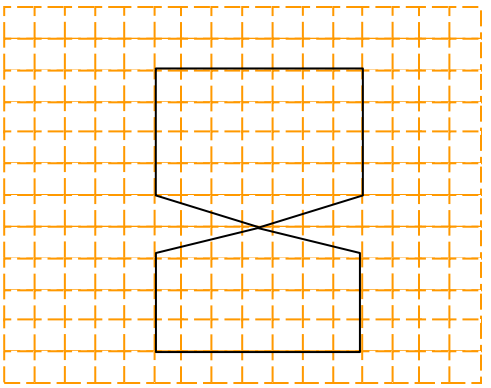

c)

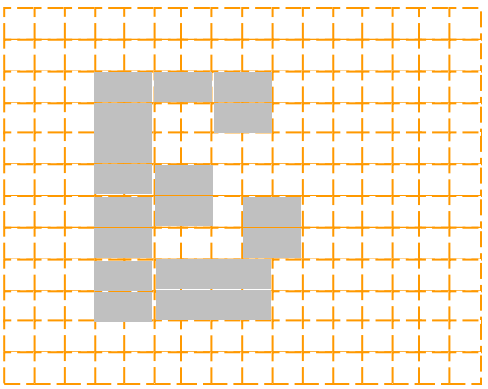

d)

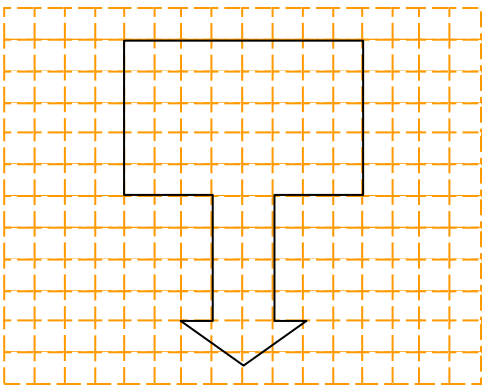

e) Estimate the area.

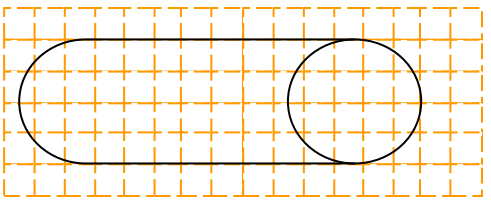

© Great Math Worksheets. Unauthorized copying or reproduction of this worksheet is strictly prohibited.